EP Series

Features

1. Size: According to customer's installation requirements
2. Operating voltage: 3V---1000V
3. Operating frequency: 20KHz---500KHz
4. Power:30W maximum
5. Compliant with: UL, VDE, 3C, CQC
6. Compliance: RoHS, REACH

★ Customizable According to Customer Requirements

Application areas

1. Power Supply: PD Power Supply, Outdoor Power Supply, Mobile Phone /Laptop Charger, LED Driver Power Supply, Computer Switching Power Adapter.
2. Household Appliances: TV, air Conditioner, Refrigerator, Audio Equipment, Lighting Equipment.
3. Industrial and Power Equipment: Charging Piles, High-Frequency Inverter Welding Machines, UPS Uninterruptible Power Supplies, Photovoltaic Inverters, and Wind Power Converters.

EP 系列

功能特性

1.尺寸：根据客户安装需求
2.工作电压：3V---1000V
3.工作频率：20KHz---500KHz
4 功率：30W 最大
5 符合：UL,VDE,3C,CQC
6.符合：RoHS ,REACH
★可根据客户要求定制

应用领域

1. 电源：PD 电源、戶外电源、手机/笔记本充电器、LED 驱动电源、电脑开关电源适配器。

2. 家用电器：电视、空调、冰箱、音响、照明设备。

3. 工业与电力设备：充电桩、高频逆变电焊机、UPS 不间断电源、光伏逆变器、风电变流器。

Shape and Dimensions(dimensions are in mm) 外观与尺寸

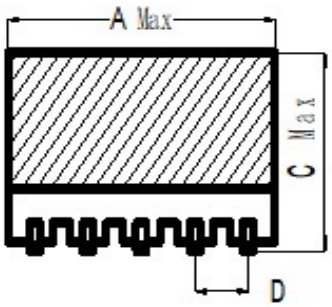

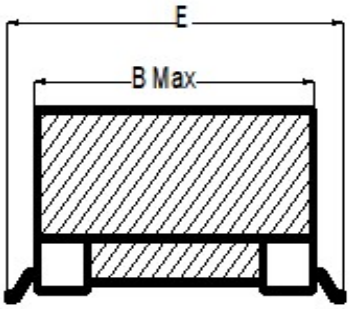

Spec 规格	A	B	C	D	E	Operating Frequency 工作频率	Power 功率
EP7	11.0Max	9.0 Max	9.5Max	2.5±0.5	14.5±0.5	20kHz-500KHz	1-30W
EP10	12.5Max	11.5 Max	12.0 Max	2.5±0.5	14.6±0.5	20kHz-500KHz	1-30W
EP13	14.0 Max	15.0 Max	13.0 Max	2.5±0.5	17.0±0.5	20kHz-500KHz	1-30W